SPRAYEZ-4500 HYDRAULIC PROPORTIONER USER MANUAL

Important Safety Instructions

Read all warnings and instructions in this manual. Save these instructions.

Standard Technical Parameters,

Model	SprayEZ – 4500 Hydraulic Spray Machine
The ratio of raw material	1:1
Max working pressure	3500 psi
Single component output pressure	3770psi
Max fluid temperature	194°F
Max output	45lbs/min
Max heated hose length	300ft
Heated hose power	5000W
Heater power	9000W×2
Drive model	Hydraulic
Whole power	24KW
Voltage	Three-phase 240V 60Hz

Standard configuration of SprayEZ – 4500 Hydraulic Spray Machine

Proportion Fixed Mainframe
Spray gun
2 Transfer pumps
Heated hose 50'
Transfer Lines
Whip hose 5'
Maintenance Tools
User Manual

READ ME FRIST, IT IS VERY IMPORTANT:

- Never try to exchange ISO and POLY transfer pumps and hoses.
- Add TSL into the TSL cup before use, can not run the machine without TSL.
- After one day's work, take apart the gun blocks and mixing chamber, clean them and put them into the gun cleaning liquid.
- **CIRCULATE A-SIDE (ISO) WEEKLY.**
- Any questions, please contact us. **877.772.9629**

Contents

1. Warnings

The following warnings are for setup, use, grounding, maintenance, and repair of this equipment. The exclamation point symbol ⚠ alerts you to a general warning and the hazard symbol refers to procedure-specific risk. Refer back to these warnings. Additional, product-specific warnings may be found throughout the body of this manual where applicable.

⚠ **WARNING**	
	**ELECTRIC SHOCK HAZARD** *This equipment must be grounded. Improper grounding, setup, or usage of the system can cause electric shock.* • *Turn off and disconnect power at main switch before disconnecting any cables and before servicing equipment.* • *Connect only to grounded power source.* • *All electrical wiring must be done by a qualified electrician and comply with all local codes and regulations.*
	**TOXIC FLUID OR FUMES HAZARD** *Toxic fluids or fumes can cause serious injury or death if splashed in the eyes or on skin, inhaled, or swallowed.* • *Read MSDS to know the specific hazards of the fluids you are using.* • *Store hazardous fluid in approved containers, and dispose of it according to applicable guidelines.* • *Always wear chemically impermeable gloves when spraying, dispensing, or cleaning equipment.*
	**PERSONAL PROTECTIVE EQUIPMENT** *You must wear appropriate protective equipment when operating, servicing, or when in the operating area of the equipment to help protect you from serious injury, including eye injury, inhalation of toxic fumes, burns, and hearing loss. This equipment includes but not limited to:* • *Protective eyewear* • *Clothing and respirator as recommended by the fluid and solvent manufacturer* • *Gloves* • *Hearing protection*

WARNING



SKIN INJECTION HAZARD

High-pressure fluid from spray gun, hose leak, or ruptured components will pierce skin. This may look like just a cut, but it is a serious injury that can result in amputation. ***Get immediate surgical treatment.***

- *Engage raw material valve lock when not spraying.*
- *Do not point gun at anyone or at any part of the body.*
- *Do not put your hand over the spray tip.*
- *Do not stop or deflect leaks with your hand, body, glove, or rag.*
- *Turn off the machine when you stop spraying and before cleaning, checking, or servicing equipment.*
- *Tighten all fluid connections before operating the equipment.*
- *Check hoses and couplings daily. Replace worn or damaged parts immediately.*




FIRE AND EXPLOSION HAZARD

Flammable fumes, such as solvent and paint fumes, in work area can ignite or explode. To help prevent fire and explosion:

- *Use equipment in well ventilated areas only.*
- *Eliminate all ignition sources; such as pilot lights, cigarettes, plastic drop cloths, and portable electric lamps.*
- *Keep work area free of debris, including solvent, rags and gasoline.*
- *Do not plug or unplug power cords. Do not turn power or light switch on or off when flammable fumes are present.*
- *Ground all equipment in the work area.*
- *Hold spray gun firmly to side of grounded pail when triggering into pail.*
- *If there is a static sparking or you feel a shock, stop operation immediately. Do not use equipment until you identify and correct the problem.*
- *Keep a working fire extinguisher in the work area.*



THERMAL EXPANSION HAZARD

Fluid subjected to heat in confined spaces, including hoses, can create a rapid rise in pressure due to the thermal expansion. Over-pressurization can result in equipment rupture and serious injury.

- *Open a valve to relieve the fluid expansion during heating.*
- *Replace hoses proactively at regular intervals based on your operation conditions.*

WARNING	
	**PRESSURIZED ALUMINUM PARTS HAZARD** *Use of fluids that are incompatible with aluminum in pressurized equipment can cause serious chemical reactions and equipment rupture. Failure to follow this warning can result in death, serious injury, or property damage.* • *Do not use 1,1,1-trichloroethane, methylene chloride, other halogenated hydrocarbon solvents or fluids containing such solvents.* • *Many other fluids may contain chemicals that can react with aluminum. Contact your material supplier for compatibility.*
	**EQUIPMENT MISUSE HAZARD** *Misuse can cause death or serious injury.* • *This equipment is for **Professional** use only.* • *Do no leave the work area while the equipment is energized or under pressure. Turn off all equipment when the equipment is not in use.* • *Do not operate the unit when fatigued or under the influence of drugs or alcohol.* • *Do not exceed the maximum working pressure or temperature rating of the lowest rated system component. See **Technical Data** in all equipment manuals.* • *Use fluids and solvents that are compatible with equipment wetted parts. See Technical Data in all equipment manuals. Read fluid and solvent manufacturer's warnings. For complete information about your material, request MSDS forms from distributor or retailer.* • *Check equipment daily. Repair or replace worn or damaged parts immediately with genuine manufacturer's replacement parts only.* • *Do not alter or modify equipment.* • *Use equipment only for its intended purpose. Call your distributor for information.* • *Route hoses and cables away from traffic areas, sharp edges, moving parts, and hot surfaces.* • *Do not kink or over bend hoses or use hoses to pull equipment.* • *Keep children and animals away from work area.* • *Comply with all applicable safety regulations.*

WARNING	
	**MOVING PARTS HAZARD** *Moving parts can pinch or amputate fingers and other body parts.* • *Keep clear of moving parts.* • *Do not operate equipment with protective guards or covers removed.* • *Pressurized equipment can start without warning. Before checking, moving, or servicing equipment, follow the Pressure Relief Procedure in this manual. Disconnect power or air supply.*
	**BURN HAZARD** *Equipment surfaces and fluid that's heated can become very hot during operation. To avoid severe burns, do not touch hot fluid or equipment. Wait until equipment/fluid has cooled completely.*

2. Important Two-Component Material Information

Isocyanate Conditions	
	• *Spraying or dispensing materials containing isocyanates creates potentially harmful mists, vapors, and atomized particulates.* • *Read material manufacturer's warnings and material MSDS to know specific hazards and precautions related to isocyanates.* • *Prevent inhalation of isocyanate mists, vapors, and atomized particulates by providing sufficient ventilation in the work area. If sufficient ventilation is not available, a supplied-air respirator is required for everyone in the work area.* • *To prevent contact with isocyanates, use appropriate personal protective equipment, including; chemically impermeable gloves, boots, aprons, and goggles, is also required for everyone in the work area.*

Material Self-ignition	
	*Some materials may become self-igniting if applied too thickly. Read material manufacturer's warnings and material MSDS.*

Keep Components A and B Separate	
	*Cross-contamination can result in cured material in fluid lines which could cause serious injury or damage equipment. To prevent cross-contamination of the equipment's wetted parts, never interchange component A (isocyanate) and component B (resin) parts.*

Moisture Sensitivity of Isocyanates

Isocyanates (ISO) are catalysts used in two component foam and polyurethane coatings. ISO will react with moisture (such as humidity) to form small, hard, abrasive crystals, which become suspended in the fluid. Eventually a film will form on the surface and the ISO will begin to gel, increasing in viscosity. If used, this partially cured ISO will reduce performance and the life of all wetted parts.

The amount of film formation and rate of crystallization varies depending on the blend of ISO, the humidity, and the temperature.

To prevent exposing ISO to moisture:

- Always use a sealed container with a desiccant dryer in the vent, or a nitrogen atmosphere. Never store ISO in an open container.
- Keep the ISO lube pump reservoir (if installed) filled with TSL. The lubricant creates a barrier between the ISO and the atmosphere.
- Use moisture-proof hoses specifically designed for ISO, such as those supplied with your system.
- Never use reclaimed solvents, which may contain moisture. Always keep solvent containers closed when not in use.
- Never use solvent on one side if it has been contaminated from the other side.
- Always lubricate threaded parts with ISO pump oil or grease when reassembling.

Changing Materials

- When changing materials, flush the equipment multiple times to ensure it is thoroughly clean.
- Always clean the fluid inlet strainers after flushing.
- Check with your material manufacturer for chemical compatibility.

3. Flow Charts of Raw Material

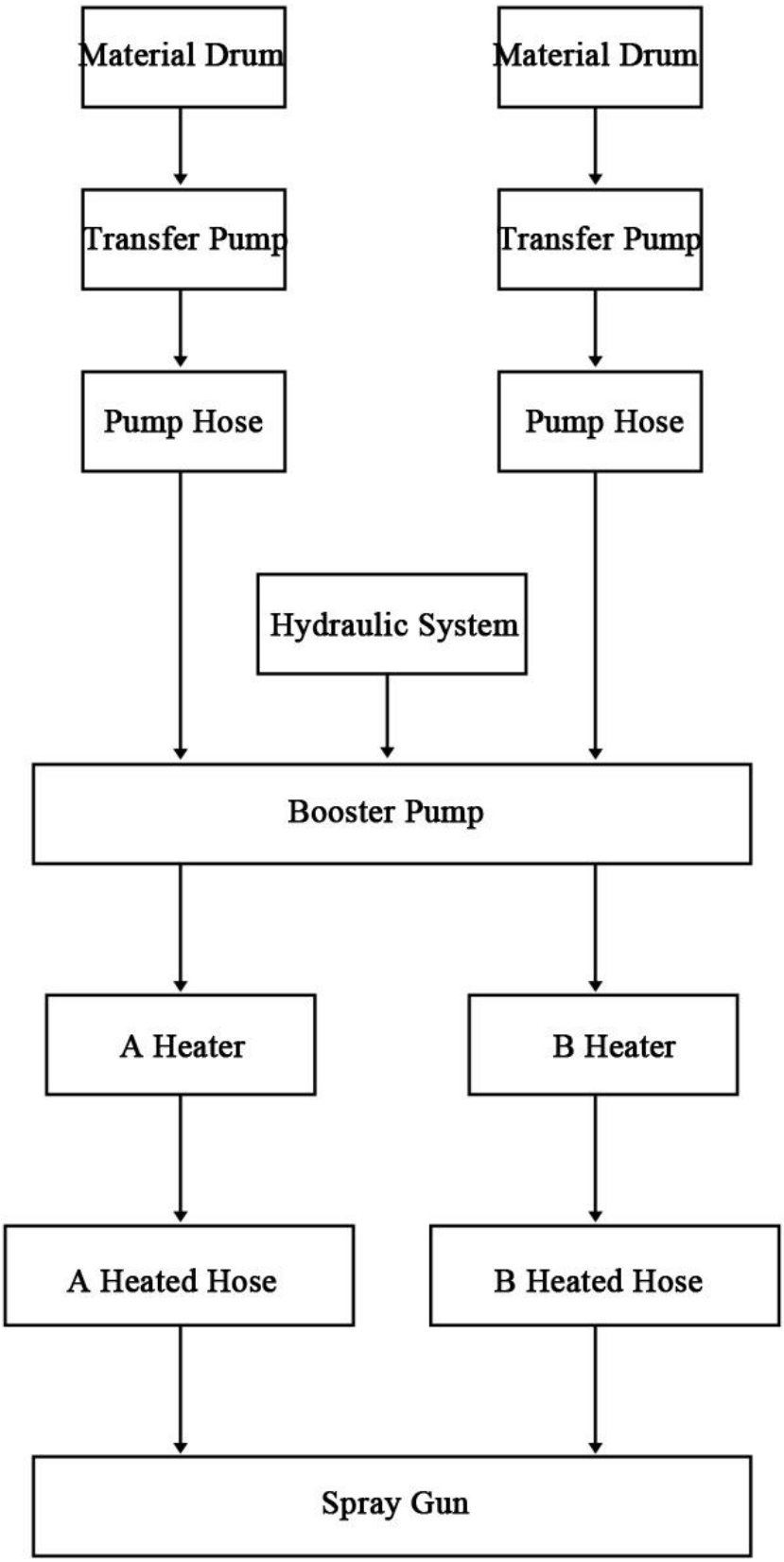

4. System Installation

4.1 Installation of raw material pipe system:

Lead the POLY and ISO from material drum to the pump entrance of the mainframe; connect hoses of chemical material and air to spray gun respectively.

1. Installation of material feeding system:

1.1 Open the drum, put in the material transfer pump

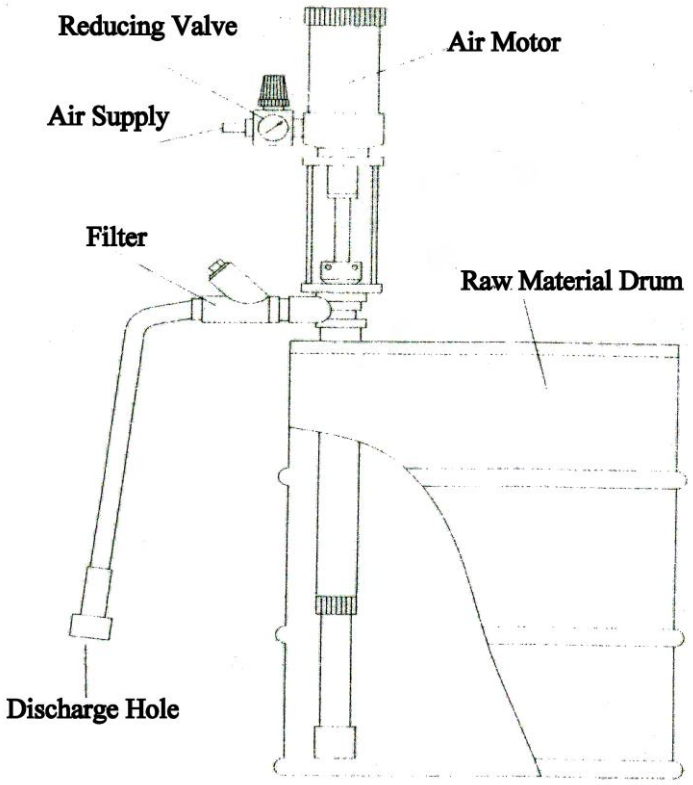

Figure (2)

1.2 Connect the pump hose to discharge hole of transfer pump and the booster pump entrance of the mainframe respectively. As seen in figure (3)

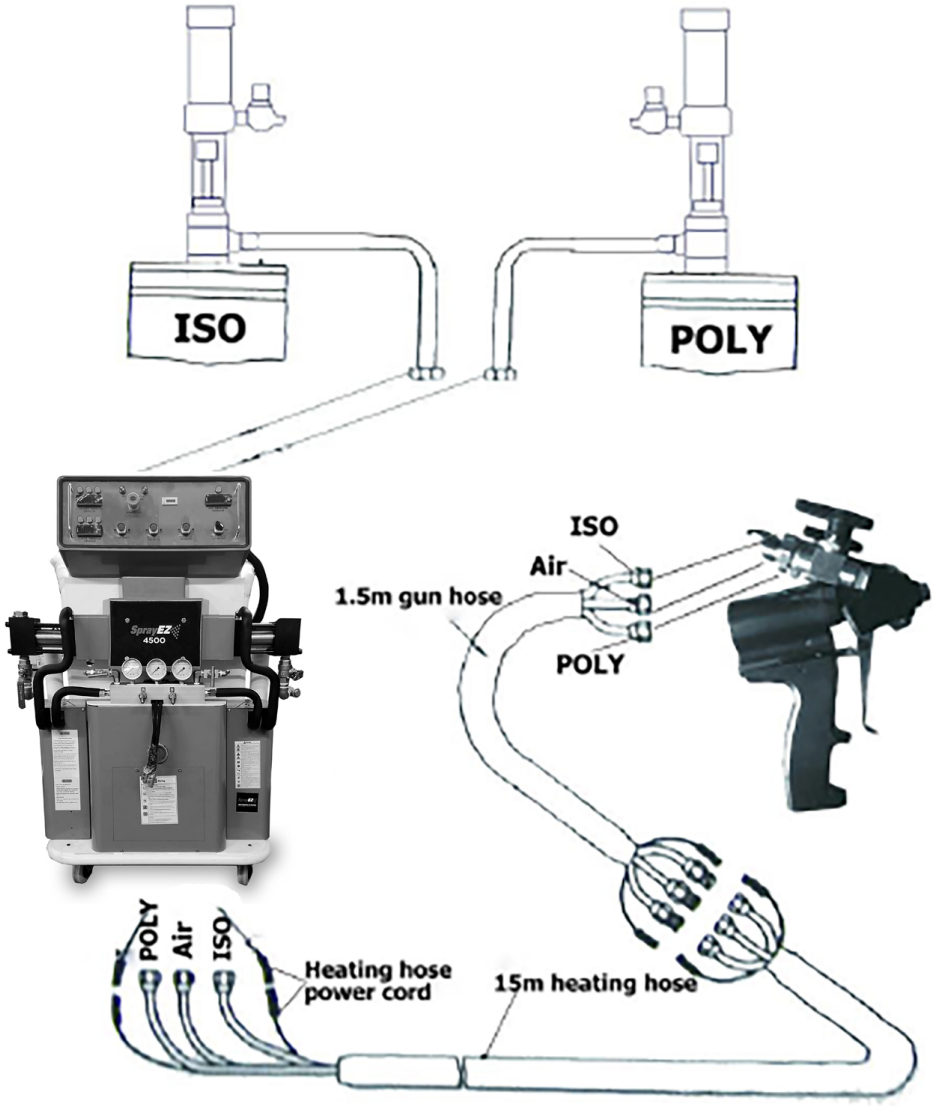

Figure (3)

2. Installation of heated hose

Connect the hose to the mainframe and spray gun respectively.

Connect the power cord of the heated hose to the transformer output wire. <that will give the heated hose 40 amps max power>

See figure (4).

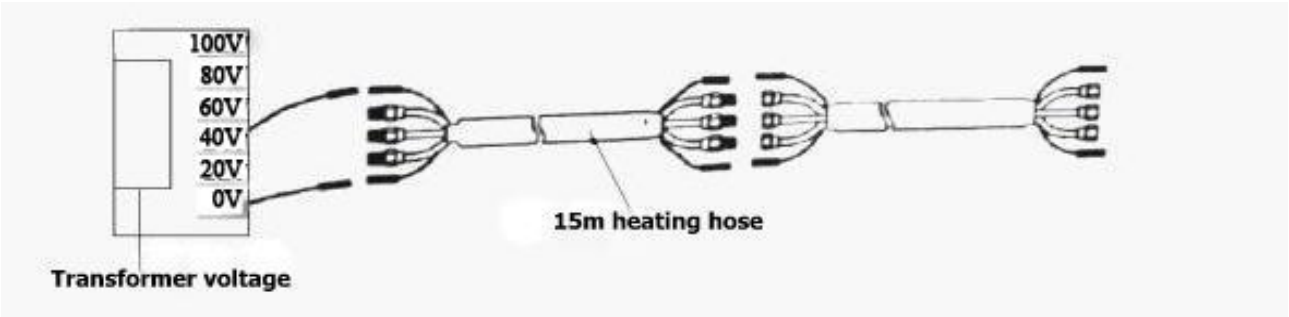

Figure (4)

4.2. The connection and requirement of power source

Connect the power line from the mainframe to **three-phase 240V 60Hz** power which is equipped with a breaker. The yellow/green line is a protective grounding wire.

WARNING

- *Installing this equipment requires access to parts which may cause electric shock or other serious injury if work is not performed properly. Be sure your installation complies with all national, state and local safety and fire codes.*
- *The two wires of the instrument panel are charged when the main power is on. Turn off the main power when maintaining the equipment*

4.3 Control panel: as Figure (5)

Figure (5)

1. Emergency Stop

Press the stop switch in an emergency situation. The equipment is still electrified. Be sure to cut off the main power when you want to maintain the equipment. After finishing maintenance, turn the knob clockwise to reset the equipment to working state.

4.3 Control panel -continued.

Figure (5)

2. Main Switch
The main power switch controls the heater power and heated hose power. Press this button, A, B and heated hose controller temperature will display.

3. System Startup
This switch controls the hydraulic system, pressing this button, the electrical motor will start running, if not, swap any two of the power cords connection order.

4. Temperature Controller
A Isoyanate temperature controller for A side heater temperature display and set,
B Polyol temperature controller for B side heater temperature display and set,
Hose temperature controller for heated hose temperature display and set.

How to set temperature
1. Press "MAIN SWITCH FOR HEATER" to "ON" position,
2. Press "SET" knob on the controller three times, the LED digital Continuous flashing,
3. Press ▲ or▼ to set the temperature,
4. Press "SET" one time finish the setting.

5. Counts
For recording the booster pump runs, press button on counts, the number back to "0".

6. ON/OFF Switch for Machine
This switch controls connection between hydraulic system and booster pump. It has two positions, "WORK" and "RESET", on "WORK" position, hydraulic system drive the booster pump working, the chemical has high pressure inside, on "RESET" position, the hydraulic system and booster pump disconnect, booster pump will stop working.

4.4 Main Power Switch

This switch controls whole machine power.

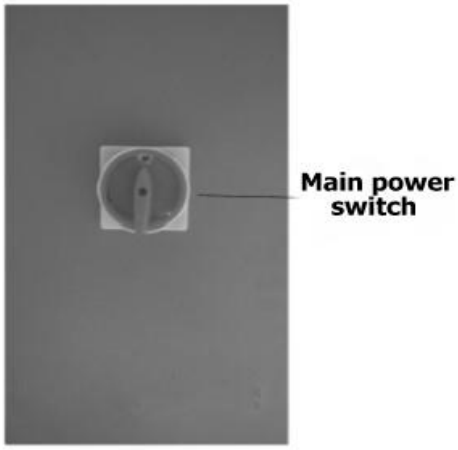

Figure (6)

NOTICE

All electrical appliances are only charged by the input power line and the black and gray line from the input power line to the main switch. So, take apart or cut the main power when maintaining the inside of the equipment, even if the switch is off.

4.5 Over-temperature Alarm

For protecting equipment, the device is equipped with over-temperature alarm. (Figure 7)

When the alarms sounds it is indicating the temperature is too high, the heater will stop working itself, please check the temperature and troubleshoot the problem.

Figure (7)

5. System Operation

5.1. Check before operation

1. There is 4/5 TSL (Throat Seal Liquid) in the TSL cup on the machine. The supply pipe (Coarser pipe) should be in the cup 1/3 of the way, and the return pipe (Finer pipe) should be in the bottom of the cup. (Figure 8).

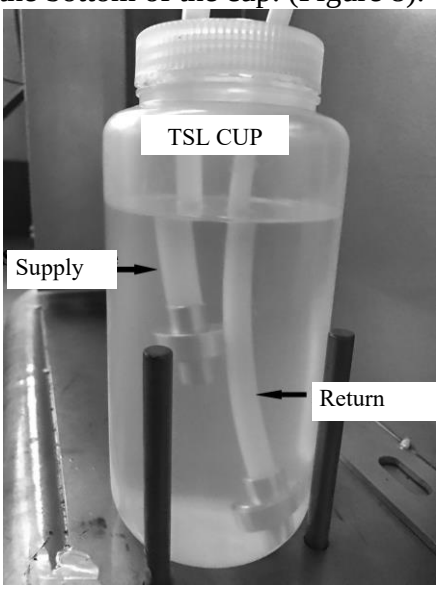

Figure (8)

2. Make sure all the connections are tight.

3. Make sure the connection of power line is connected correctly, and that protective grounding wire is in place.

4. Ensure all the switches on the control panel are in the OFF position.

****Don't spray any body parts.**
****Don’t let the gun point at anyone.**
****Don’t look into the hole of the gun mixing chamber.**

It is required for all persons involved with spraying foam to wear PPE (Personal Protection Equipment) I.E. - Proper eye, ear, and face protection, respirator or fresh air supply device, and both gloves and protective outer wear.

5.2. Initial start (The first use of the new machine)

NOTICE
Proper system setup, startup, and shutdown procedures are critical to electrical equipment reliability. Failure to follow safety procedures will cause voltage fluctuations that can damage electrical equipment and void the warranty.

WARNING
Do not operate this machine without all covers and shrouds in place.

Before starting the system you must make sure all fluid flow lines, air supply lines and power cords are connected correctly. The operator must fully understand every part on the control panel.

1. Turn on the Main Power Switch, switch System Startup to "ON" position, turn ON/OFF Switch for Machine to "WORK" position, the pump will begin transferring fluid to the hoses. Adjust the hydraulic pressure to 2Mpa-5Mpa. The system, heater and heated hose will fill with raw material. Once filled up, the machine will stop working automatically.

WARNING
The direction of rotation of the electrical motor should be consistent with the direction of the arrow, otherwise it will cause no pressure and damage the system. See Figure 9.

Figure (9)

How to adjust the hydraulic system pressure:

- **Loosen the locking nut of the pressure adjustment screw with a wrench, (Figure 10)**
- **Rotate the pressure adjustment screw, clockwise to increase the pressure, counterclockwise to reduce the pressure (The general working pressure is 5Mpa-7Mpa), (Figure 11)**
- **When the pressure adjustment is completed, lock the lock nut of the pressure adjustment screw with the wrench.**

Figure (10)

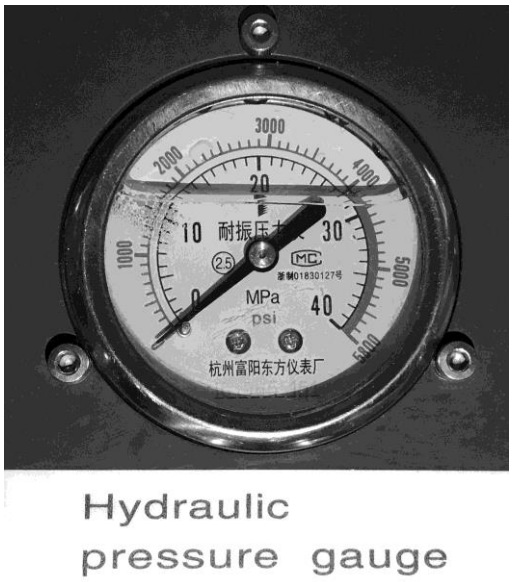

Figure (11)

NOTICE

In the hydraulic system there is a relief valve, the relief valve set pressure is 9Mpa. The role is to limit the working pressure of the hydraulic system.

If the pressure rises above 9Mpa the pressure relief valve will activate and reduce the pressure. Do not operate the machine in under overpressure or overflow conditions as this may damage the machine and void the warranty.

2. Remove the two fluid blocks beside the tip of the gun.

3. Place clean containers under two fluid blocks respectively. At the same time, turn on the raw material valve of the two fluid blocks slowly, let all air in the fluid line out, until the fluid flows smoothly. See figure (12)

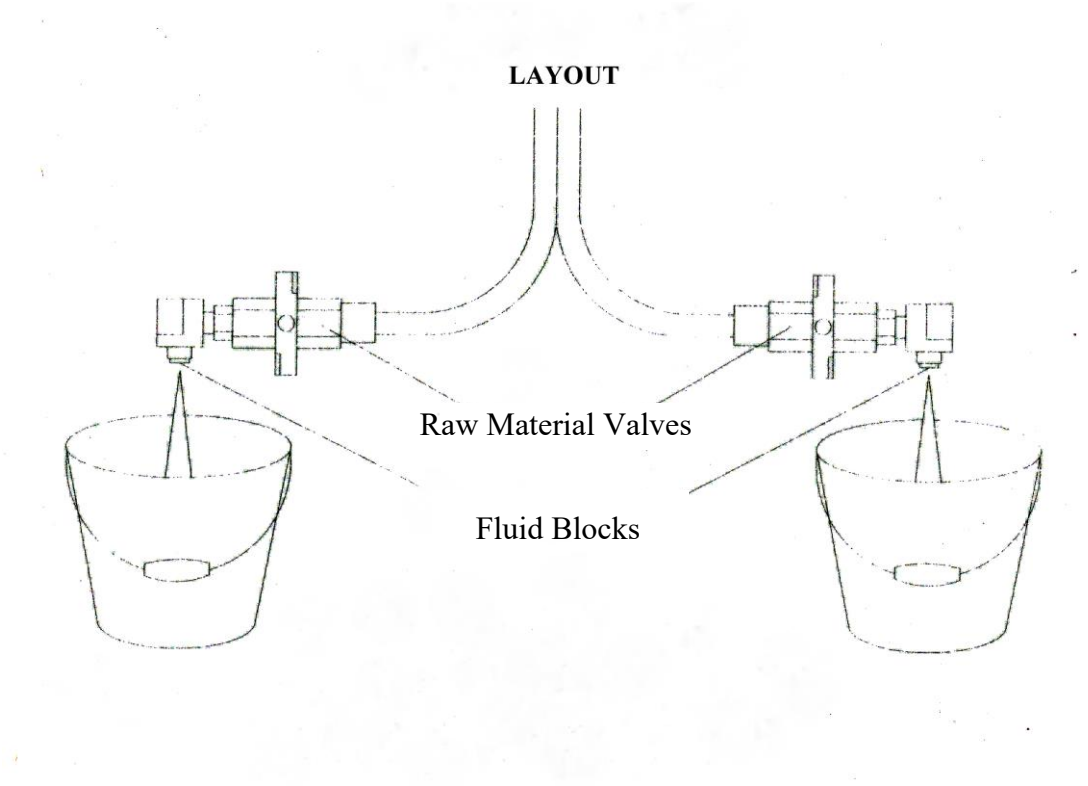

Figure (12)

4. Close the raw material valve at the same time, the pressure value shown on the pressure gauge of raw material should be approximately equal. If one of them is higher, turn the raw material valve slightly on higher side, let raw material flow out, until the two pressures equalize.

5. Clean the traces of raw materials on fluid block, coated with white grease, install the fluid block to the gun again. Tighten the screws, let two fluid blocks closely contact with the gun tip, and make sure there is no air/material leakage.

6. Straighten the fluid line to avoid uneven Heating and Damage to the internal heating wire. Set the heating temperature to appropriate setting. After the temperature is up to the setting value, then improve the hydraulic system pressure to the working pressure (5Mpa-8Mpa).

WARNING

1. Before spraying, do not set the hydraulic pressure at the value of working pressure to avoid damaging pressure gauge for high pressure, and even explosion, because the raw material will expand when heated.

2. Make sure to turn on/off two valves of raw material at the same time.

7. Turn on the inlet switch of the gun first, then the raw material valve on the two fluid blocks.

8. At the moment, the whole system is prepared, and it can spray as long as you pull the trigger.

NOTICE
Make sure to turn off the raw material valve ***at the same time*** *on the two fluid blocks when you stop working to avoid unintended discharge.*

5.3. Daily Shutdown Steps

NOTICE
Put the reset/work switch to the reset position every time when you shutdown.

1. Press Main Switch for Heater button, shut down the heated system.
2. Press System Startup button, shut down the hydraulic system.
3. Turn off the Main Power Switch.
4. Close two valves on the gun fluid blocks.
5. Close the air supply off to the system.
6. Disconnect the power cord of whole system.
7. Clean up the site, confirm the daily shutdown steps are completed.

5.4. Long-time Shutdown Steps

This step is for long-term shutdown or storage of the machine. Please follow the steps to operate: (mainly for the isocyanate)

1. Close the air supply and the Main Power Switch, take transfer pumps out from the raw material drums, use the solvent to clean the outside of transfer pumps,

2. Place transfer pumps in a container with clean solvent, ISO and POLY transfer pumps should be placed in separate containers,

3. Open the air pressure valve on transfer pump, adjust air pressure to 0.1Mpa-0.2Mpa,

4. Turn on the Main Power Switch,

5. Press the System Starup button, start hydraulic system, adjust the hydraulic system to 2Mpa-3Mpa,

6. Make sure gun valves close, take off gun valves,

7. Open gun valves, spill the equipment chemical into suitable containers until a clean solvent appears,

Above procedures use solvent cleaning system

8. Put transfer pumps into the container with TSL (Throat Seal Liquid), repeat the above steps, until clean TSL appears at outlet,

9. Follow daily shutdown steps, seal all inlet and outlet openings, put transfer pumps into container with TSL.

NOTICE *Isocyanate is easy to crystallize in open air, all inlets and outlets must be strictly sealed to prevent air from entering.*

6. Hydraulic System Maintenance

In the hydraulic system, the hydraulic oil purity and oil content is very important. System oil shortage can easily lead to the temperature rising to fast, lowering the viscosity of hydraulic oil. Usually the amount of hydraulic oil should be 2/3 level. Figure (13).

Figure (13)

How to choose hydraulic oil?

Generally use 68 # hydraulic oil.

For temperatures below 41 degrees Fahrenheit, you should use 32 # or 48 # hydraulic oil.

How often to replace the hydraulic oil?

The hydraulic oil should be changed every 2 years.

How to adjust the relief valve?

The relief valve has been preset and generally does not need to be adjusted.

7. Check for Fluid Flow System and Equipment Problems

You must know the following points as a qualified operator:
1. What does normal raw material look like?
2. How the equipment works, and how to operate it correctly.
3. What normal operation of the machine looks like.
4. How to circulate the raw material in the machine.

7.1. Checking the hydraulic pressure gauges :
Start from step one below, then check step by step to determine the pressure displayed on the raw material pressure gauge is correct.

1. Confirm which material is not being supplied:
First, check the color of the material being sprayed and the quality of the foam, stop spraying to inspect if you have an issue. If the raw material pressure is low, it means supply of material from the transfer pump system is low. Check the material supply system to find if there is any blockage or the drum may be empty.

2. If there is material in the drum, the start from the farthest point and trace back to the machine looking at the most obvious areas for bloackage.

3. If the raw material pressure is to low check the following:
(1) Is there material in the drum?
(2) What's the temperature of the material?
A. High temperature will cause expansion in advance of the foaming agent in the poly drum.
B. Low temperature of the drum bottom will cause raw material viscosity to be higher then block the material transfer pump or material flow.

(3) Transfer pump
A. Is it functioning?
B. Is the air supply on and working?
C. Is the air pressure set at the proper setting?
D. Is there dirt or debris on the shaft feeding the material pump? (If yes, it means it was not wiped with oil for protection in advance, or the oil cup is not tight, and will cause to material overflow)
E. Check the filter of material transfer pump.
F. Confirm the material transfer pump body and after you are sure there are no problems in other parts. Specially note Step 3 2-B.
(4) Filter: install a filter on the material transfer pump discharge?
4. Check the following if the material pressure is to high
(1) Check the filter screens of the transporting block on the gun blocks.
(2) If there are curing and crystalline materials in the hose from the material pressure gauge to the gun, it will cause raw material flow to be impeded.

8. Drawings

Circuit Diagram

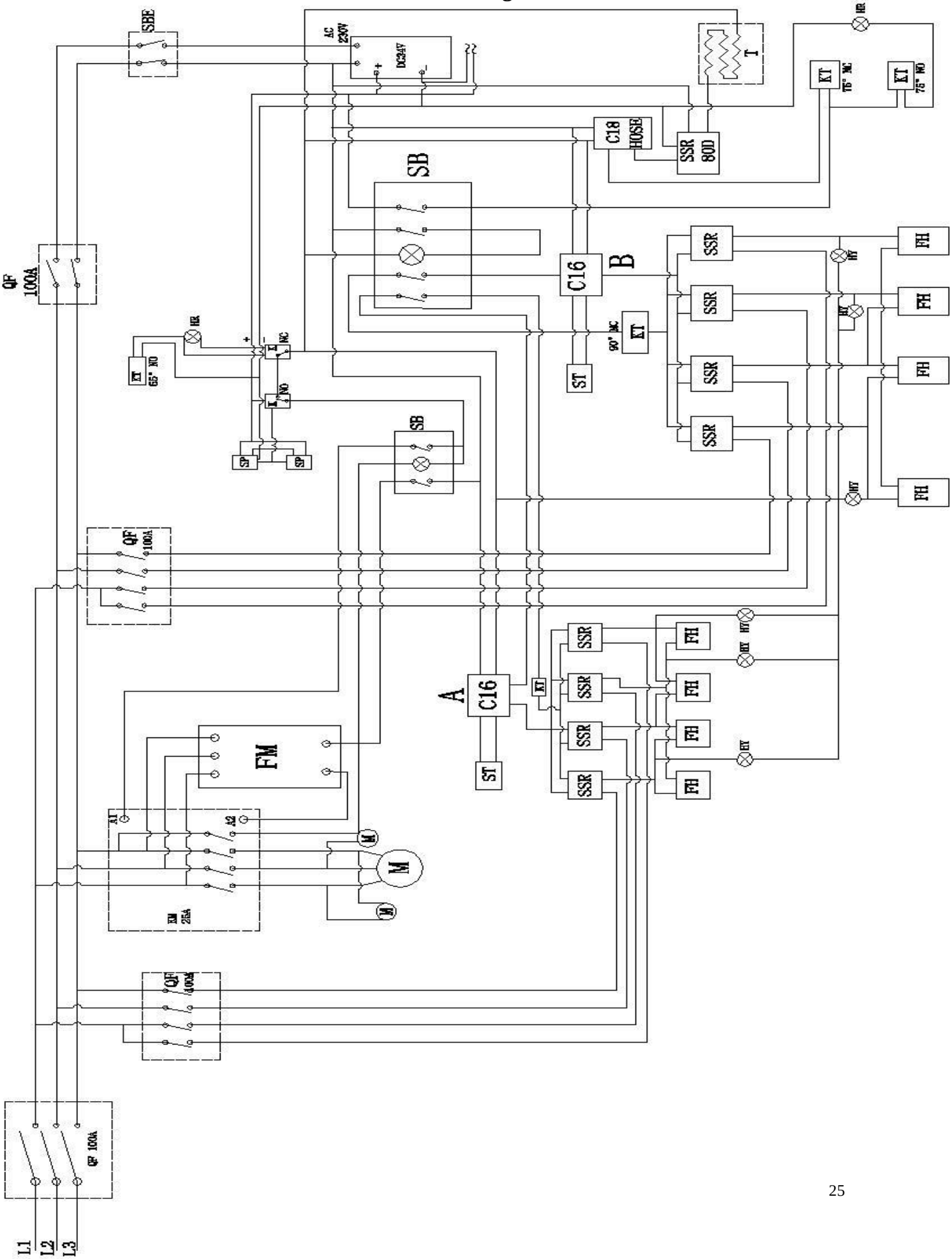

Booster Pump Decomposition Diagram

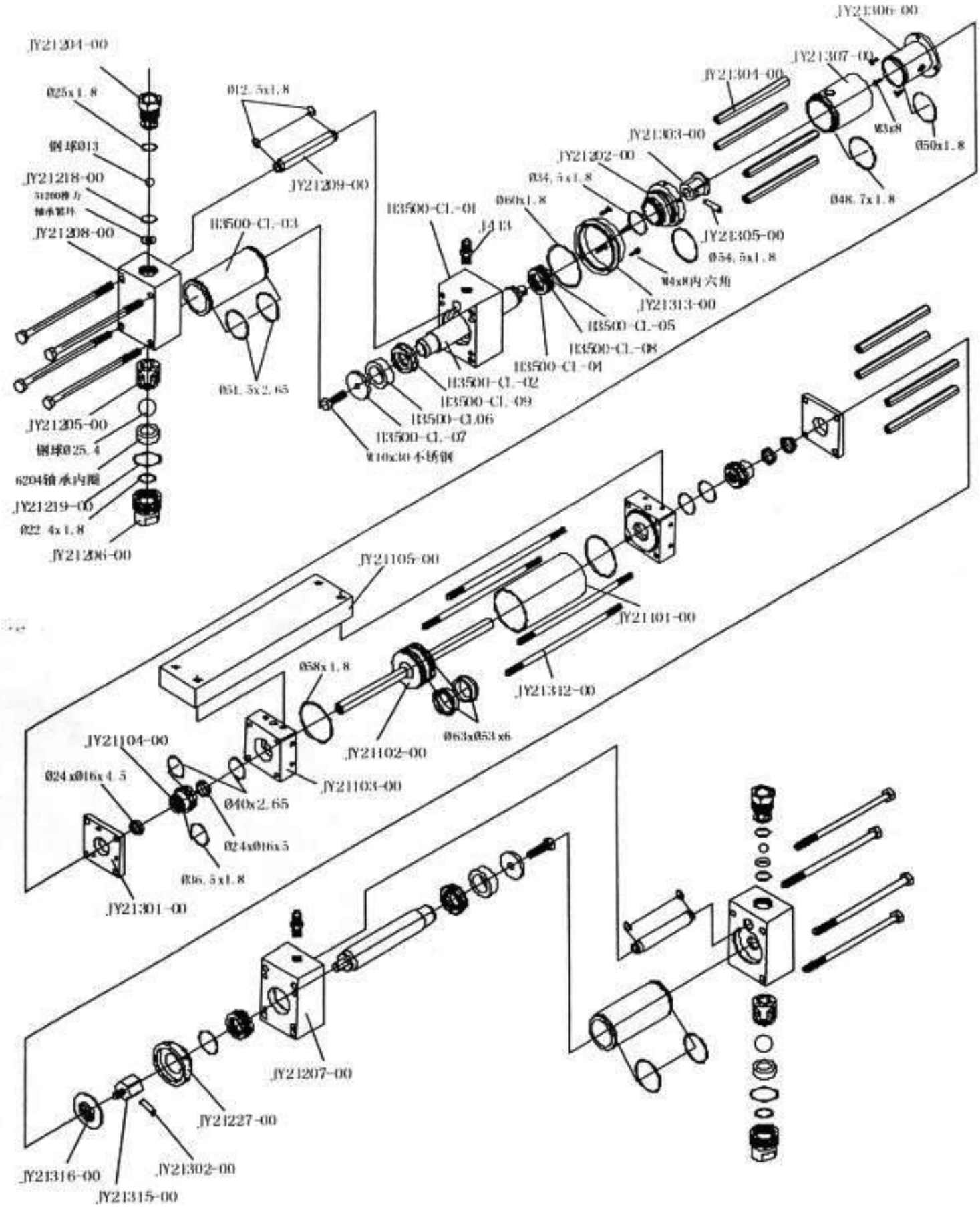

SPRAY EQUIPMENT AND COATINGS

EQUIPMENT WARRANTY

Equipment warranty Spray Equipment and Coatings, Inc. here in after referred to as SprayEZ Warrants all equipment bearing its name to be free from defects in material and workmanship on the date of sale to the original purchaser for use. With the exception of any special, extended, or limited warranty published by SprayEZ. SprayEZ will, for a period of twelve months from the date of sale, repair or replace any part of the equipment determined by SprayEZ to be defective. This warranty applies only when the equipment is installed, operated and maintained in accordance with SprayEZ' s recommendations. This warranty does not cover, and SprayEZ Shall not be liable for general wear and tear, or any malfunction, damage or wear caused by faulty installation, misapplication, abrasion, corrosion, inadequate or improper maintenance, negligence, accident, tampering, or substitution of non- SprayEZ component parts. Nor shall SprayEZ be liable for malfunction, damage or wear caused by the incompatibility of SprayEZ equipment with structures, accessories, equipment or materials not supplied by SprayEZ or the improper design, manufacture, installation, operation or maintenance of structures, accessories, equipment or materials not supplied by SprayEZ.This warranty is conditioned upon the prepaid return of the equipment claimed to be defective to an authorized SprayEZ distributor for verification of the claimed defect. If the claimed defect is verified, SprayEZ will repair or replace free of charge any defective parts. The equipment will be returned to the original purchaser transportation prepaid. If inspection of the equipment does not disclose any defect in material or workmanship, repairs will be made at a reasonable charge, which charges may include the costs of parts, labor, and transportation. This warranty is exclusive, and is in lieu of any other warranties, express or implied, including but not limited to warranty of merchantability or warranty of fitness for a particular purpose.

SprayEZ' s sole obligation and buyer's sole remedy for any breach of warranty shall be as set forth above. The buyer agrees that no other remedy (including, but not limited to, incidental or consequential damages for lost profits, lost sales, injury to person or property, or any other incidental or consequential loss) shall be available. SprayEZ makes no warranty, and disclaims all implied warranties of merchantability and fitness for a particular purpose, in connection with accessories, equipment, materials or components sold but not manufactured by SprayEZ. These items sold, but not manufactured by SprayEZ are subject to the warranty, if any, of their manufacturer. In no event will SprayEZ be liable for indirect, incidental, special or consequential damages resulting from SprayEZ supplying equipment hereunder, or the furnishing, performance, or use of any products or other goods sold hereto, whether due to a breach of contract, breach of warranty, the negligence of SprayEZ or otherwise.

THIS WARRANTY IS EXCLUSIVE, AND IS IN LIEU OF ANY OTHER WARRANTIES, EXPRESS OR IMPLIED, INCLUDING BUT NOT LIMITED TO WARRANTY OF MERCHANTABILITY OR WARRANTY OF FITNESS FOR A PARTICULAR PURPOSE.
SPRAYEZ-W01M022017

NOTES

NOTES